RevNo	REVISION	Date

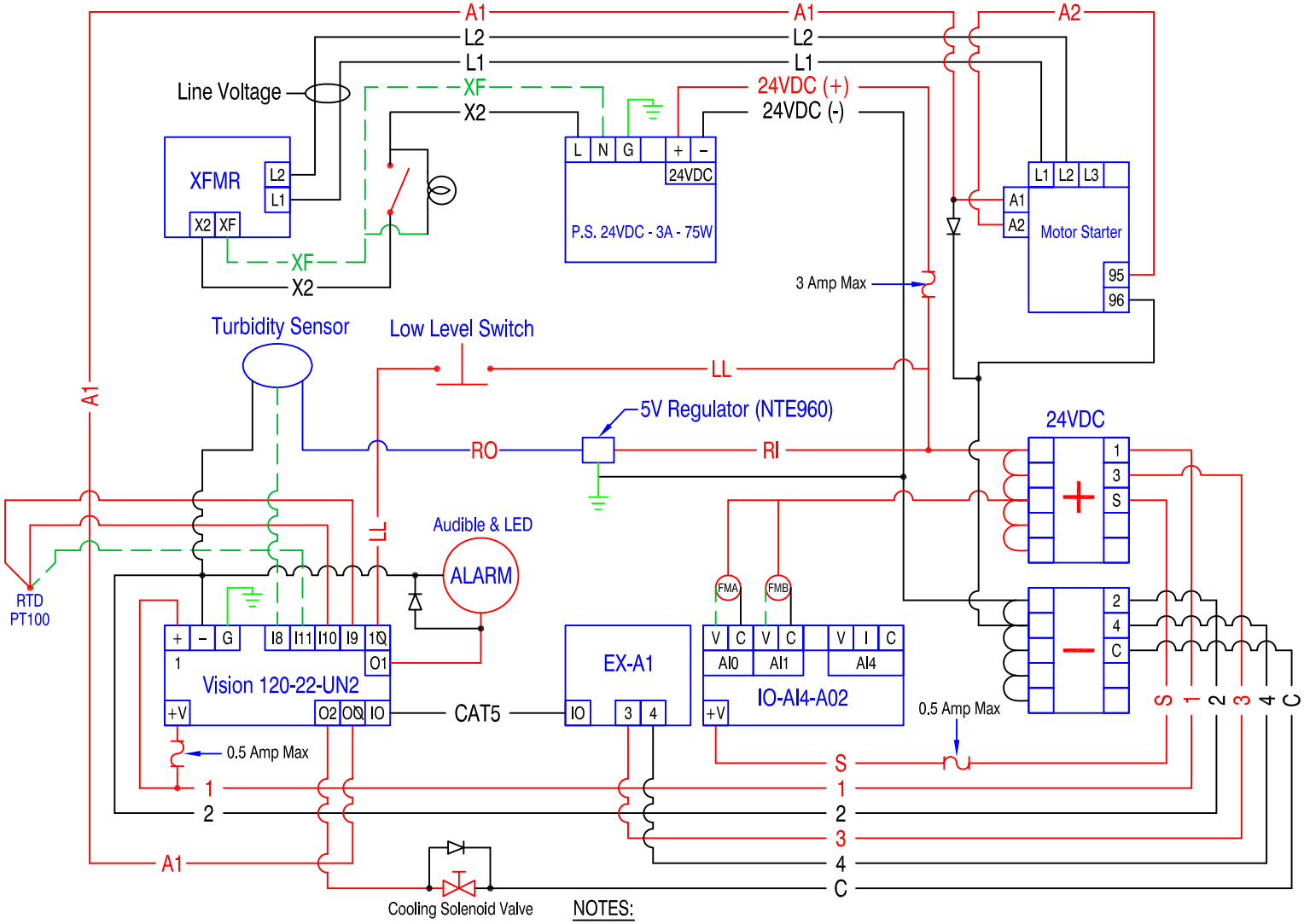

NOTES:

1. Customer to provide motor disconnect switch per local code.
2. Place padlock on panel as required per lockout tag procedures. — — = White Wire (neutral)
3. Wire #'s are placed at the end of each of the same wire.

UFS CORPORATION
Electrocoating Equipment

Tel: +219-464-2027
Fax: +219-464-8646

Visit us on the Web at
www.ufsc.com

Designed By:	JD
Date:	8/23/06
Approved By:	
Date:	

Pnl,CIP w/Cooling, 24V

Wiring Diagram

UFS Part No. 221063

Sheet:	1/1
Revision:	0
Units:	mm[in]
Scale:	None

THIS MATERIAL IS THE CONFIDENTIAL PROPERTY OF UFS CORPORATION AND SHOULD NOT BE USED IN ANY WAY DETRIMENTAL TO THE CORPORATION'S INTEREST. MATERIAL SHOULD NOT BE COPIED OR REPRODUCED IN PART OR IN WHOLE, AND INFORMATION FROM IT SHALL NOT BE FURNISHED TO OTHERS WITHOUT WRITTEN PERMISSION. ALL RIGHTS OF DESIGN AND INVENTION ARE RESERVED BY UFS CORPORATION. MATERIAL TO BE RETURNED UPON REQUEST.